RANGER

Sensor to Cloud Platform



PLUG-&-PLAY, INSTANT CONNECTIVITY OF A SENSOR TO THE CLOUD OVER CELLULAR NETWORKS

OPTIMIZED FOR BATTERY LIFE USING LATEST CELL MODEM TECHNOLOGY LTE CAT M1 / NB-IOT

MULTI INPUT/OUTPUT TO CONNECT TO A VARIETY OF SENSORS INCLUDING ANALOG, HART, SDI-12, AND MODBUS

MQTT & SPARKPLUG-B READY TO INTEGRATE WITH HOSTS OTHER THAN SIGNALFIRE CLOUD

FEATURES

- LTE CAT M1 / NB-IoT connectivity to cloud services
- Integrated inputs/output for multi-sensors
- Data location from built-in GPS
- SignalFire cloud monitoring/alarming/reporting service
- Powers sensors from battery or external solar

LTE-M · NB-IoT · FIRSTNET Built with AT&T · MQTT · Sparkplug™ COMPATIBLE

PRODUCT OVERVIEW

The SignalFire RANGER is an IoT (internet of things) cellular transmitter utilizing LTE-M/NB-IoT technology to bring sensor data directly to the cloud. Data is transmitted over cellular networks using the MQTT/Sparkplug protocol directly to the SignalFire Cloud for a complete monitoring and alarming service or can easily be integrated into a customer's existing system.

The built-in RANGER I/O consists of two (2) digital inputs, one (1) analog input and one (1) relay output. The digital inputs can detect on/off status or frequencies up to 2kHz for pulse counting and totalizing applications. The analog input supports a 1-5Vdc or 4-20mA device and provides power to the sensor from the built-in battery pack. The relay output is a latching single pole single to provide on/off control to a local device.

In addition to the built-in I/O the RANGER supports an optional expansion modules to support additional sensor types including Modbus, HART, SDI-12, RTD, and additional analog and digital inputs.

The RANGER comes complete with the mobile device ready SignalFire cloud interface to monitor, trend and receive alarms either by text or email message. In addition, the cloud platform provides for remote configuration and troubleshooting of the RANGER node and its attached sensor(s) and the relay output may be controlled from the cloud interface to remotely control pumps, motors, and valves.

SIGNALFIRE WIRELESS TELEMETRY

www.signal-fire.com | 140 Locke Drive, Suite B, Marlborough, MA 01752 USA | 978.212.2868

RANGER

Sensor to Cloud Platform

TECHNICAL SPECIFICATIONS

Operating Temp:
-40 to +185°F (-40 to 85°C)

Humidity:
0% - 100% condensing

Input Power:

- Battery Pack: Four D-cell Lithium Thionyl Chloride, 76AHr
- Optional solar power
- Optional 10-30Vdc input

Input/Output:

Standard

- 1 Latching Relay Output (2A @ 30Vdc; 0.3A @ 110Vac; 0.5A @ 125Vac). Failsafe & local automation configurable
- 2 Digital Inputs report state, total counts, frequency (2kHz max), volume total with K Factor
- Analog Input (passive or active): 4-20mA, 1-5V, 0.5-2.5V, 0-5V, 0-10V, 0-15V. Configurable for flow totalizing mode
- Provides a configurable 13V or 18V to attached sensor(s). Maximum current of 60mA.

Expansion Module Options:
(one module possible per RANGER)

2AI1DI Module:

- Adds 2 additional analog inputs and 1 additional digital input

Modbus Module:

- Modbus RTU - RS485 up to 8 slaves, 32 or 96 total registers (read/write)

HART Module:

- Supports 1-15 HART sensors in multi-drop mode
- Reports 4 process variables, field device status, unique identifier and device tag for each HART device
- Scan and configure HART IDs with the Ranger, separate HART modem not required

SDI-12 Module:

- Monitors and powers one to eight SDI-12 sensors at 13V, 60mA max
- Reads/reports up to 16 measurements
- Supports reading the default measurement and all additional measurements from connected SDI-12 devices

RTD Module:

- 3-Wire Pd100 RTD input

Battery Life:
Up to 8 years

Data Interface:

- LTE CAT M1 / NB-IoT, auto-selectable
- SparkPlug B messaging

Cellular Radio Power:
23dBm

Antenna Type:
LTE w/ Internal GPS

Enclosure:
Industrial polycarbonate
UV Rated; IP67

Safety Rating:
Class 1 Division 2 Certified, Groups A, B,C, D. Temperature Code T5. Certified to CSA C22.2 No. 213:2017, Conforms to UL 121201:2017, CE Approved

Electrical Connection:
Pluggable terminal block, 16-30AWG screw terminals

Local Micro-USB Configuration Port

Weight with Battery:
1 lbs (0.6kg)

Estimated Monthly Data Usage:
Check-in interval dependent

- 1 min = 27 MB
- 5 min = 5.4 MB
- 15 min = 1.08 MB
- 60 min = 0.27 MB

Cellular Specifications:

- LTE band support:

  Cat-M1 / NB-IoT: B1, B2, B3, B4, B5, B8, B12, B13, B14, B17, B20, B25, B26, B28, B66
- Supports 4FF SIM type
- Power saving features: eDRX
- Secure socket using TLS
- PTCRB Certified
- Over-The-Air firmware upgrade (OTA)

connected by verizon

SIGNALFIRE WIRELESS TELEMETRY

www.signal-fire.com | 140 Locke Drive, Suite B, Marlborough, MA 01752 USA | 978.212.2868

RANGER

Sensor to Cloud Platform

DIMENSIONS

Standard Housing

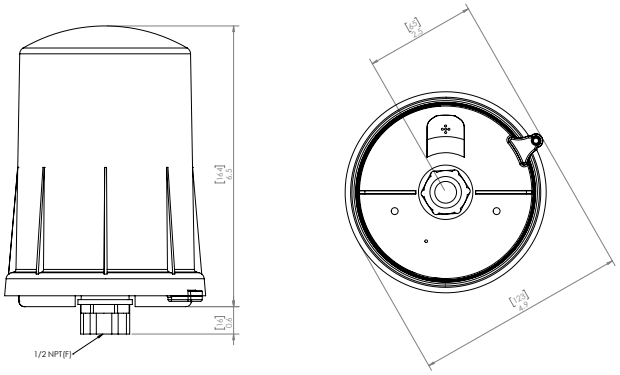

Wall Mount Housing

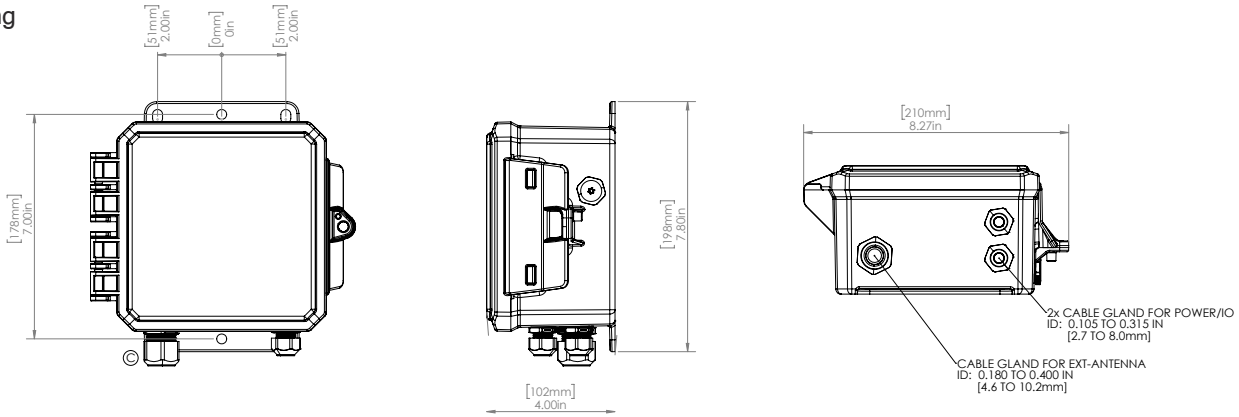

Junction Box Housing

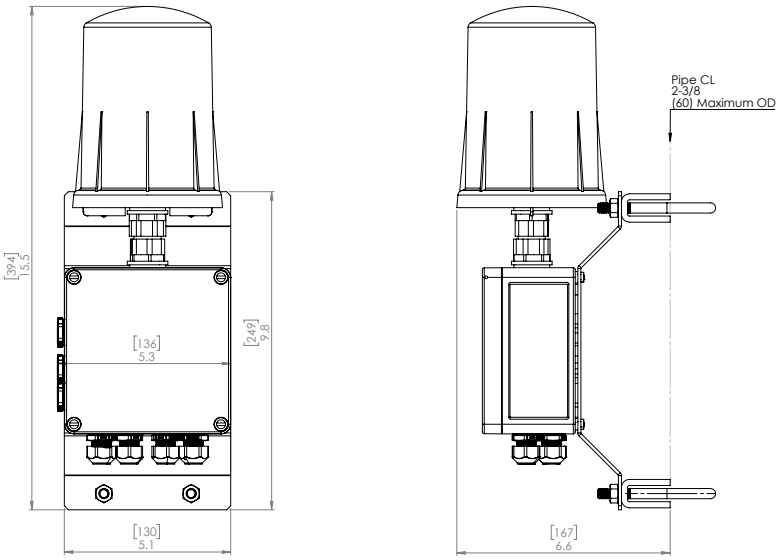

SIGNALFIRE
WIRELESS TELEMETRY

www.signal-fire.com | 140 Locke Drive, Suite B, Marlborough, MA 01752 USA | 978.212.2868

RANGER

Sensor to Cloud Platform

HOW TO ORDER

RANGER LTE M1 Transmitter

RANGER – [ ] – [ ] – [ ] – [ ] – [ ] – [ ] – [ ] – [ ]

Housing Style

STD	=	Standard IP67 round housing with 1/2" NPT input
JBOX	=	IP67 Junction Box, field mountable enclosure with termination
FBOX	=	Wall Mount style IP68 enclosure with cable gland inputs

Power Source

4DPak	=	"D" Cell Lithium battery pack (Class 1, Div. 2)
HCSolar	=	Solar System assembly with 9Ah integrated battery
DC	=	Internal DC Step Down Adapter 10-30Vdc input

Antenna Type

Int	=	Internal LTE & GPS
Ext[1]	=	External LTE SMA connector (external antenna NOT included)

[1] Option not needed with FBOX Wall Mount style because it is included with "Int" option.

HW Option

N	=	Standard I/O package 1AI, 2DI, 1Relay
2AI1DI	=	Expansion Module adds 2 Analog Input and 1 Digital Input for a total of 3AI and 3DI
Modbus	=	Expansion Module w/ RS485 Modbus Serial Port. Supports 8 devices
HART	=	Expansion Module w/ HART protocol interface. Supports 15 multidrop devices
SDI-12	=	Expansion Module w/ SDI-12 protocol interface. Supports 8 multidrop devices
RTD	=	Expansion Module w/ 3-Wire Pt100 RTD (Resistance Temperature Detector) input

SignalFire Cloud/SIM Card Subscription Plan

NoSIM	=	No SIM Card. No SignalFire Cloud. User provides LTE CAT M1 SIM Card
VZSIM1	=	VERIZON LTE CAT M1 SIM - 1 Year Data Plan, SignalFire Cloud Connectivity
VZSIM3	=	VERIZON LTE CAT M1 SIM - 3 Year Data Plan, SignalFire Cloud Connectivity
ATTSIM1	=	AT&T LTE CAT M1 SIM - 1 Year Data Plan, SignalFire Cloud Connectivity
ATTSIM3	=	AT&T LTE CAT M1 SIM - 3 Year Data Plan, SignalFire Cloud Connectivity
SFCloud1	=	No SIM Card. 1 year SignalFire Cloud. User provides LTE CAT M1 SIM Card
SFCloud3	=	No SIM Card. 3 year SignalFire Cloud. User provides LTE CAT M1 SIM Card

Subscription Data Option

N[2]	=	N/A
MB32	=	32 Modbus values
MB32/3	=	32 Modbus values, 3-yr plan
MB96	=	96 Modbus values
MB96/3	=	96 Modbus values, 3-yr plan

[2] "N" must be selected when choosing the option NoSIM.

Report Interval

N[2]	=	N/A
STD	=	60 seconds minimum
Fast	=	15 seconds minimum
Fast/3	=	15 seconds minimum, 3-yr plan
Ultra	=	5 seconds minimum
Ultra/3	=	5 seconds minimum, 3-yr plan

[2] "N" must be selected when choosing the option NoSIM.

Custom Configuration*

N	=	None

* Consult factory to discuss if custom configuration is neeed.

SIGNALFIRE WIRELESS TELEMETRY